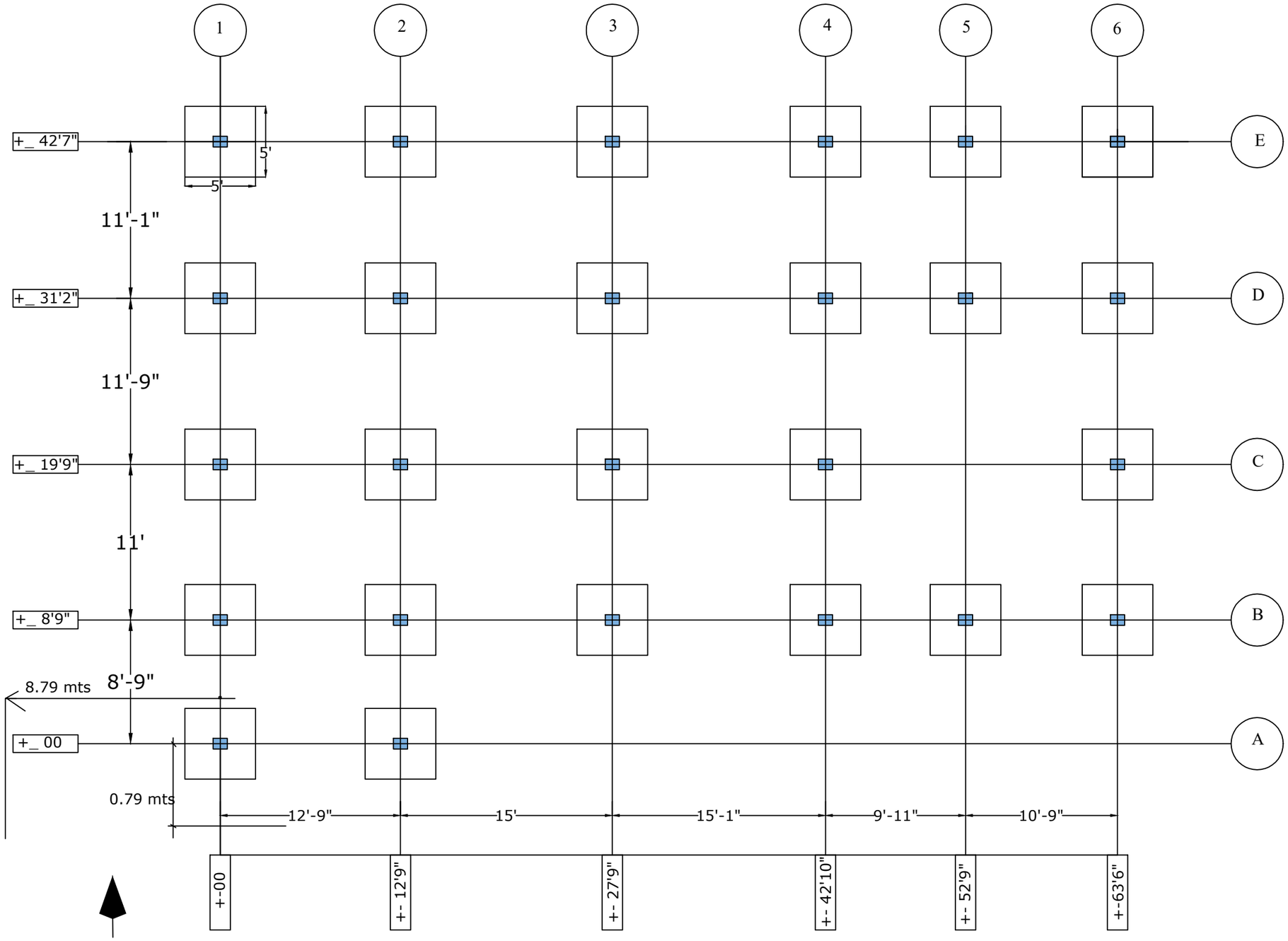

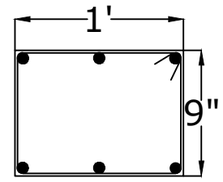

(12"X9")
12mmØ @ 6"C/C 6No's
8mmØ Stirrups @ 6"C/C

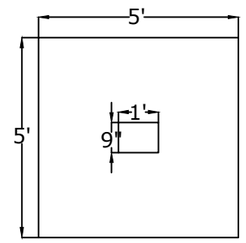

PLAN

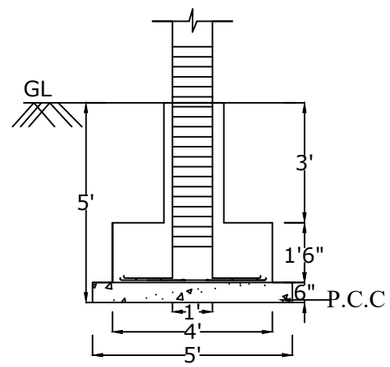

SECTION

DATE:29-11-2023	*AAGAMAA DESIGNERS*	CENTER LINE MARKING LAY OUT PLAN FOR PROPOSED CANARA BANK PANCHANAHALLI KADURU BRANCH.
DRAWN BY: DKB	Architects & Software Consultants Shop No.9, Kalkura Klassik, next to Bharat Petrol Bunk, Kadiyali, Udupi e-mail:- aagamaadesigners@yahoo.com	
CHECKED BY: DKB		
CLIENT:- CANARA BANK CIRCLE OFFICE MANGALORE		